LONGJING®
Electric

LL10Z/T355 Limit Switch 行程开关

速动开关 LL10ZR 335-11Z、LL10ZR 335-02Z
缓动开关 LL10TR 335-11Z、LL10TR 335 -02Z

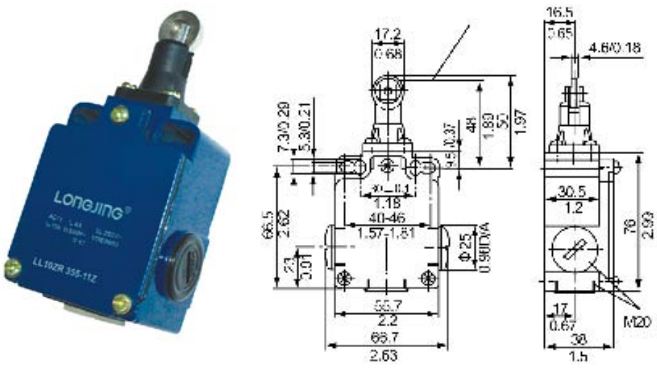

速动开关 LL10Z1K 355-11Z、LL10Z1K 355-02Z
缓动开关 LL10T1K 355-11Z、LL10T1K 355 -02Z

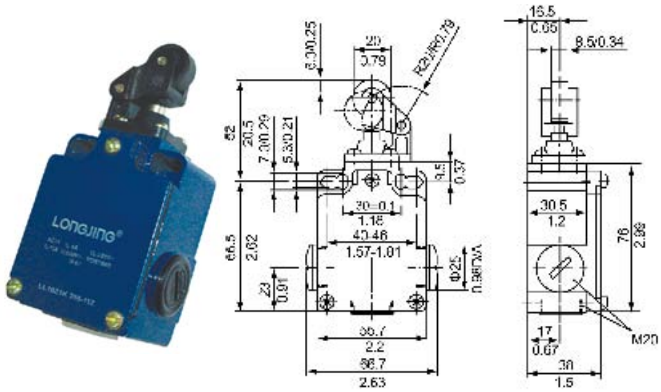

速动开关LL10Z3K 355-11Z、LL10Z3K 355-02Z
缓动开关LL10T3K 355-11Z、LL10T3K 355-02Z

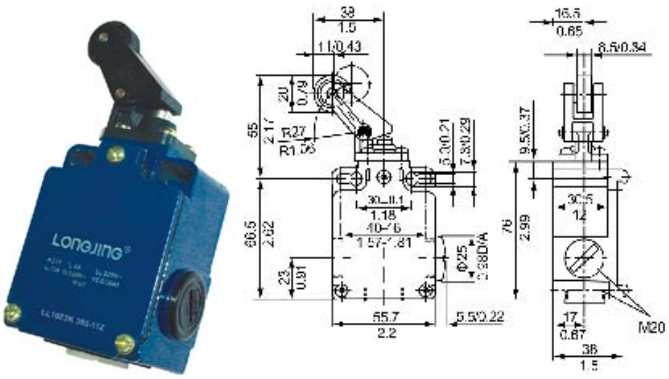

速动开关 LL10Z4VH 355-11Z、 LL10Z4VH 355-02Z
缓动开关 LL10T4VH 355-11Z、 LL10T4VH 355-02Z

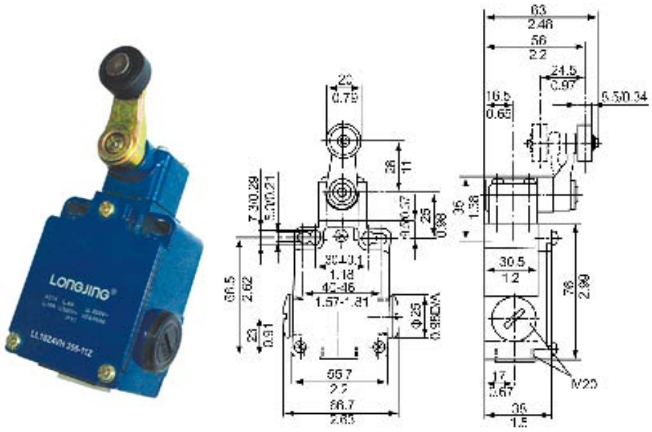

速动开关 LL10Z4V10H 355-11Z、LL10Z4V10H 355-02Z
缓动开关 LL10T4V10H 355-11Z、LL10T4V10H 355-02Z

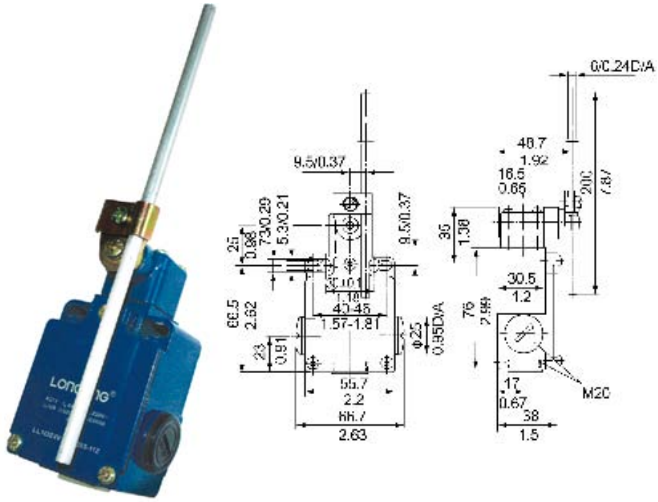
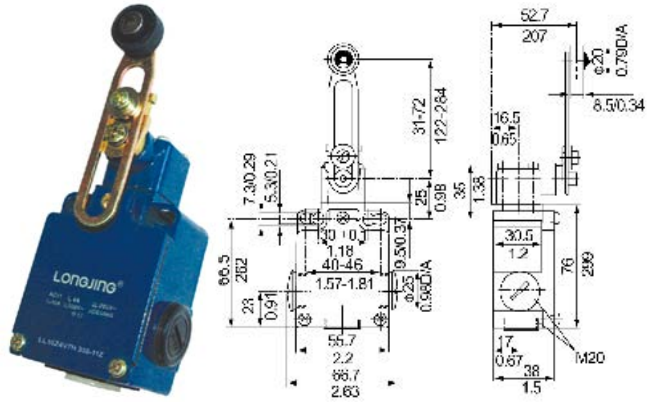
速动开关 LL10Z4V7H 355-11Z、LL10Z4V7H 355-02Z
缓动开关 LL10T4V7H 355-11Z、LL10T4V7H 355-02Z